Drawing No: D_AHI3_E100_00

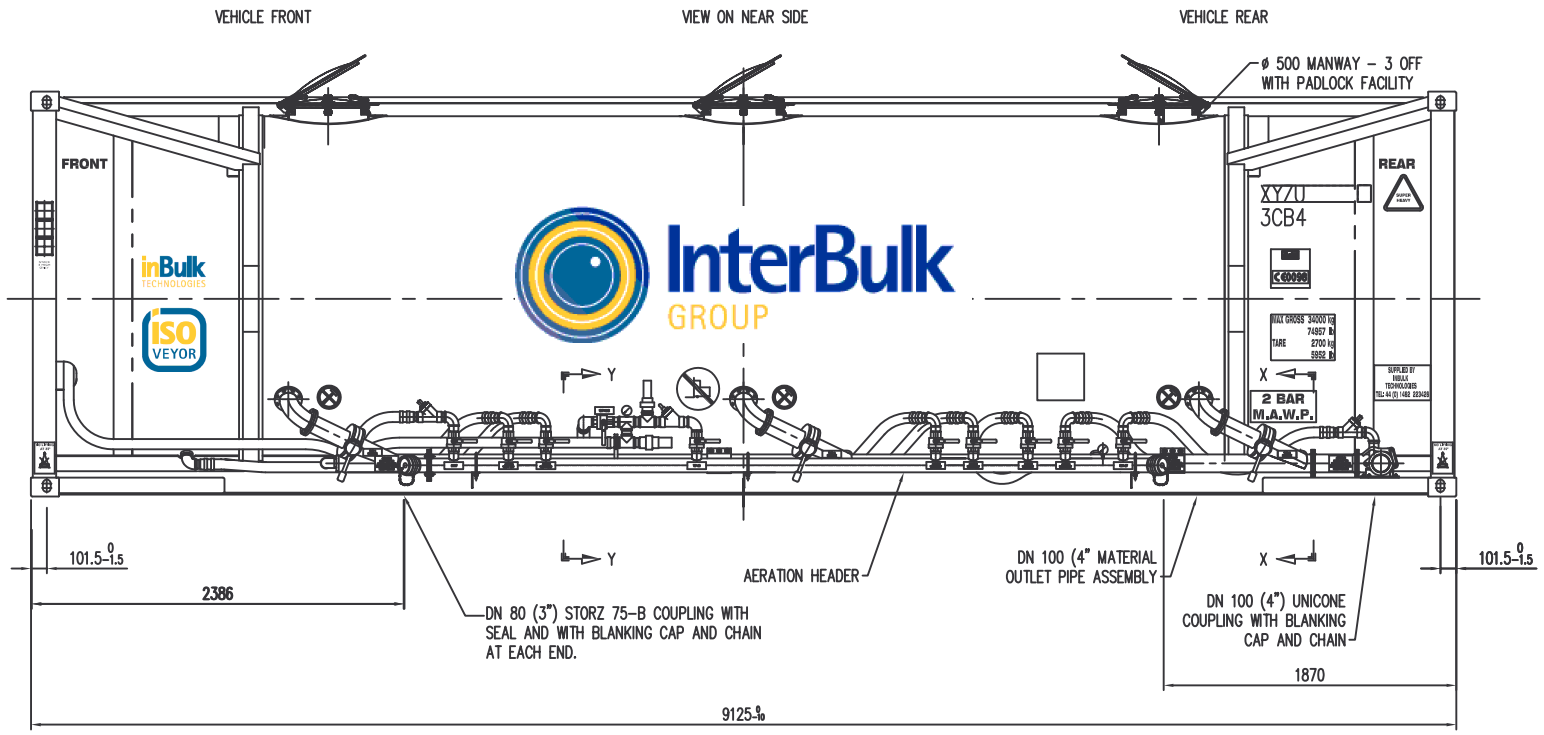

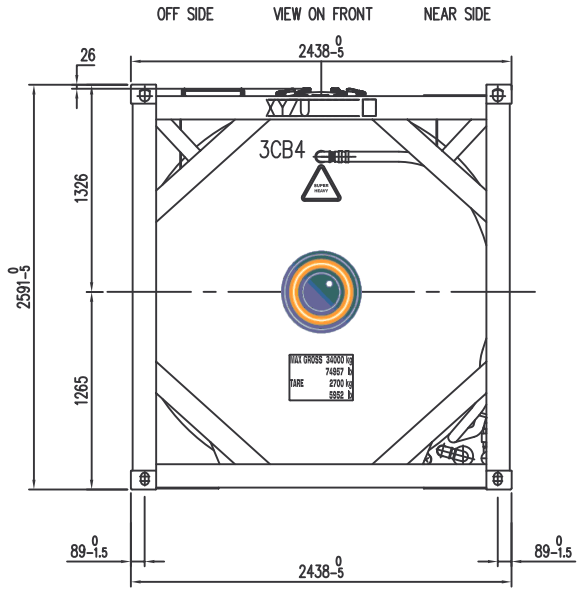

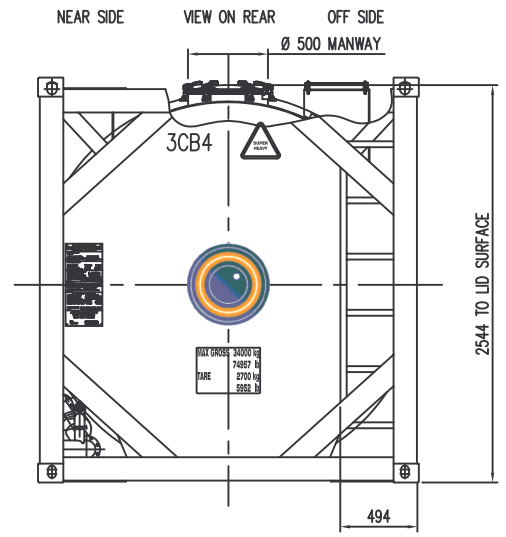

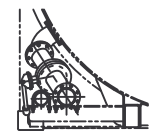

PART SECTION "X – X"

PART SECTION "Y – Y"

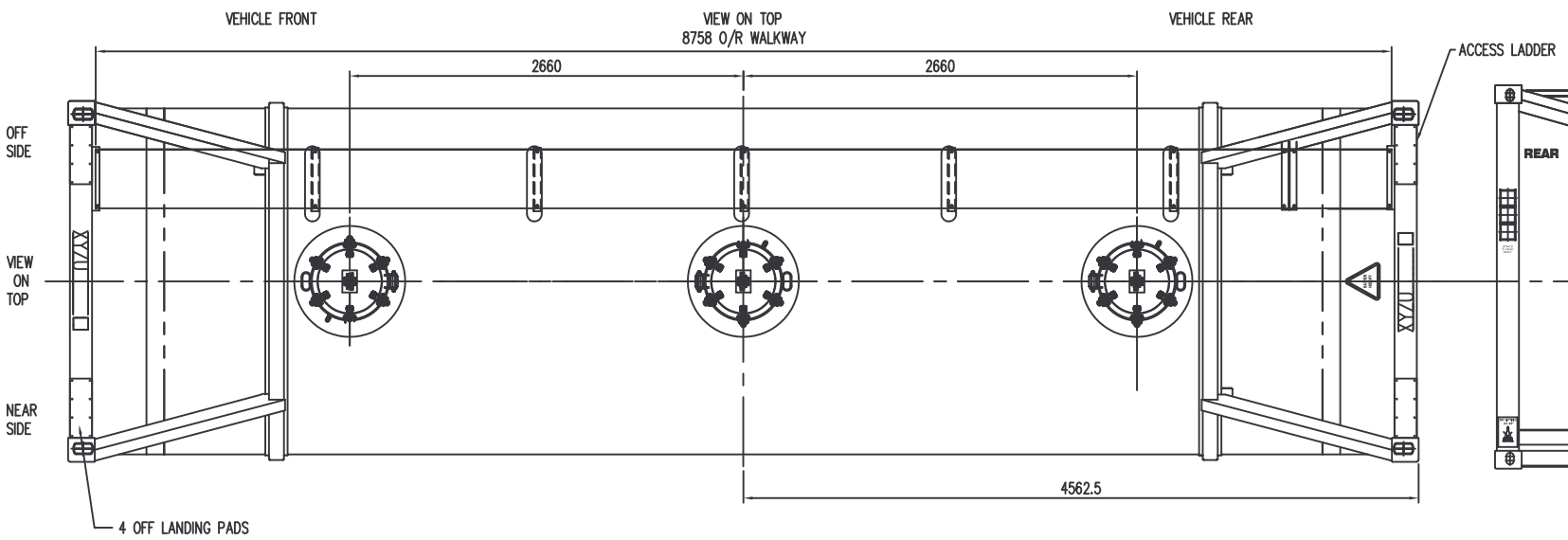

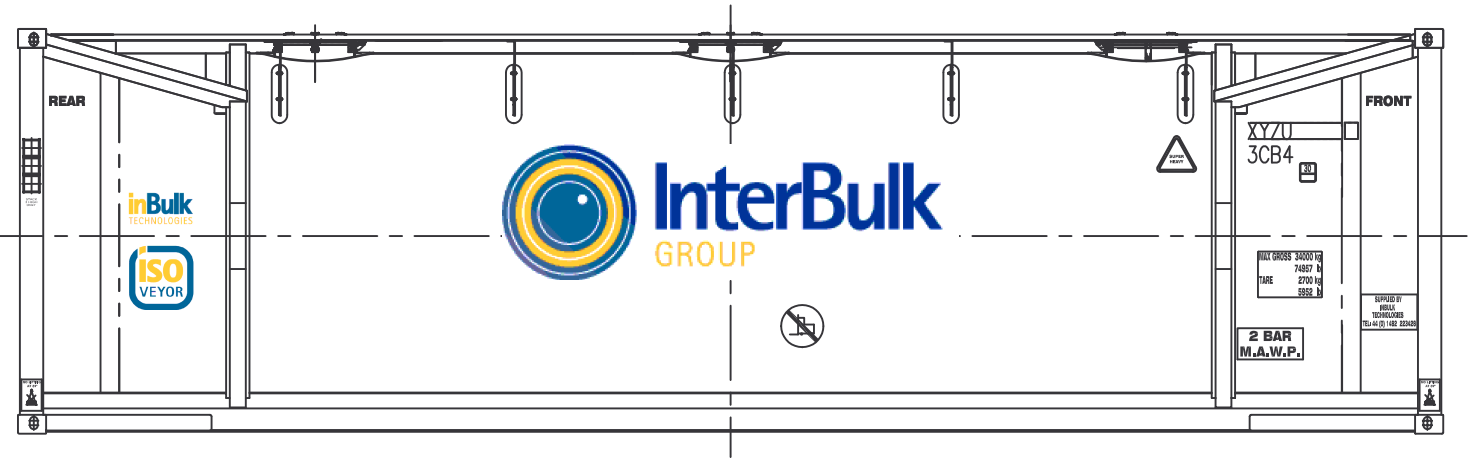

VEHICLE REAR VIEW ON OFF SIDE VEHICLE FRONT

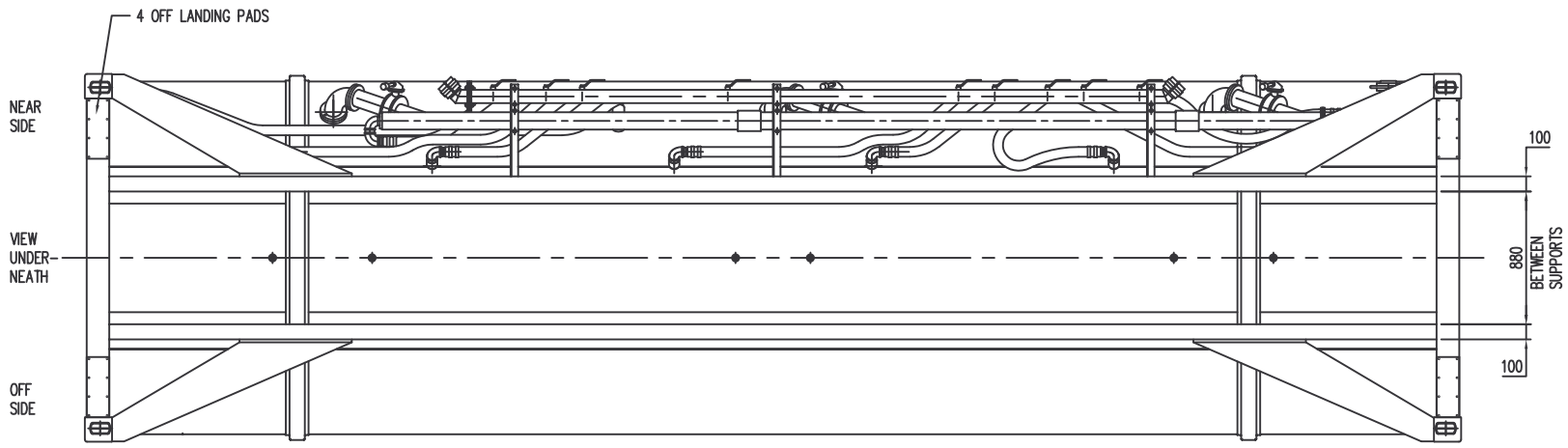

VEHICLE FRONT VIEW UNDERNEATH VEHICLE REAR

30' ISO-VEYOR 'PH'-TYPE

TARE WEIGHT	-2700 KG
MAX GROSS WEIGHT	-34000 KG
GROSS MATERIAL VOLUME	-33.9 M^3
MAX ALLOWABLE WORKING PRESSURE	-2 BARG
MATERIAL OF CONSTRUCTION – VESSEL	-ALUMINIUM
FRAME	-ALUMINIUM
STAINLESS STEEL WALKWAY/ HANDRAIL	-OPTIONAL

CODES AND STANDARDS:
CSC INTERNATIONAL CONVENTION FOR SAFE CONTAINERS;
VESSEL CONSTRUCTION – ASME VIII DIV I ED2001 ADDENDUM 2002;
GENERALLY IN ACCORDANCE WITH ISO 1496 / 3 AND UIC RAIL APPROVAL.

PAINT COLOUR: TO CLIENT SPECIFICATION.

NOTE:
TERMS "VEHICLE FRONT" AND "VEHICLE REAR" REFER TO MOUNTING ON ROAD GOING VEHICLES.

CONFIDENTIAL

INTERBULK GROUP
127 HEDON ROAD
HULL, HUMBERSIDE
HU9 1ND, ENGLAND.
Tel: +44 (0)1482 223428
Fax: +44 (0) 1482 595855
www.interbulkgroup.com

No reproduction or publication of this drawing may be made and no article may be manufactured or assembled in accordance with this drawing without prior written consent. Protected by U.K. Design Right under the terms of the copyright, design and patent act 1988.

Title: 30 Ft ISO VEYOR "PH" TYPE EXTERNAL ARRANGEMENT

Client:

Drawn: I.MCKEWAN	Date: 06.06.08	Drawing No:	Rev:
Checked:	Date:		
Scale: 1 : 25	Project No:	D_AHI3_E100_00	01

A1

DO NOT SCALE. IF IN DOUBT, ASK — 1st ANGLE PROJECTION